SACHA NEO-ROUND SHOWER

40 5/8" x 40 5/8" x 77 3/4"

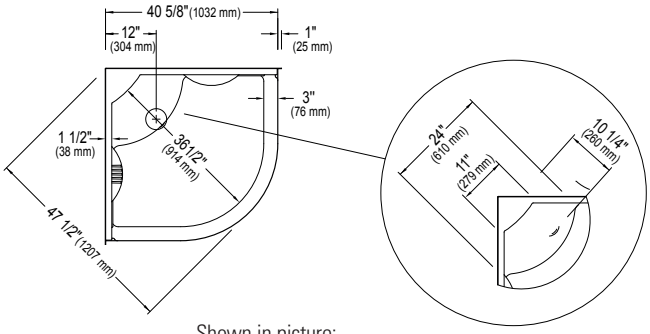

Shown in picture:
SACHA shower with the ZURICH door.

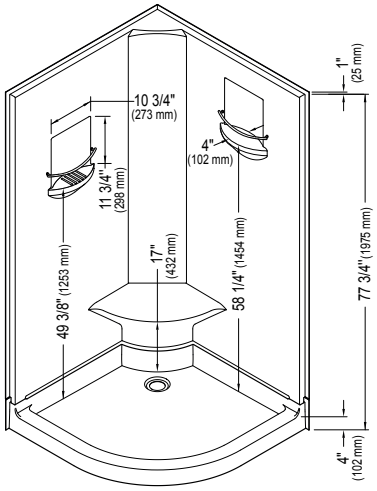

PRODUCT DESCRIPTION:

5 days

White acrylic
Contemporary style
Bars for bottle shelves in chrome included
In one piece (SC40) or two pieces (SC40-2P)

BOX SIZE:

48" x 48" x 78"

NET WEIGHT:	GROSS WEIGHT:
100 lbs	106 lbs

DOORS
MUNICH (LATERAL SLIDING)
Chrome/Clear
ZURICH (CENTRAL SLIDING)
Chrome/Clear

*Customized products, non cancellable, non returnable.

Certification ECORESPONSIBLE
First manufacturer of bathroom products in North America to be certified ecoresponsible.

CONSUMER CHOICE AWARD

Produits Neptune
6835, Picard street, Saint-Hyacinthe (Quebec) J2S 1H3
Phone: (450) 773-7058 - Fax: (450) 773-5063
produitsneptune.com

04-2018