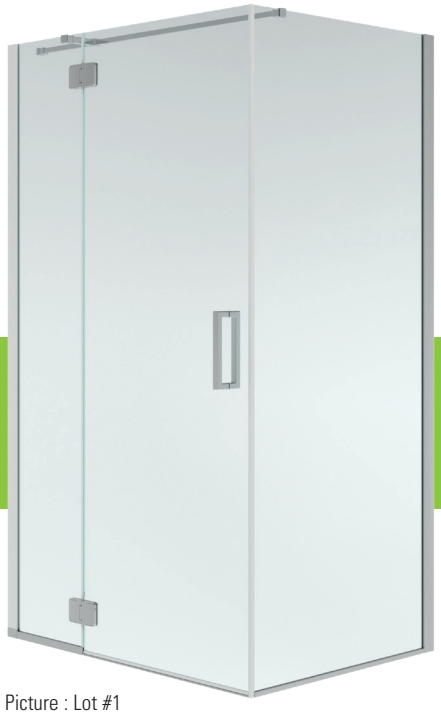

Picture : Lot #1

AZELIA 3648
SHOWER DOOR
LOT #0 - LOT #1

Lot #0
Technical drawing on page 2

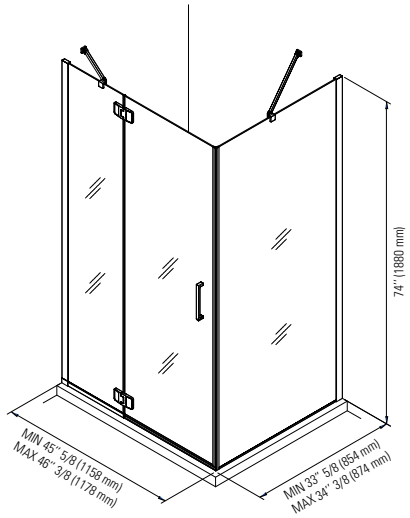

Lot #1
Technical drawing on page 3

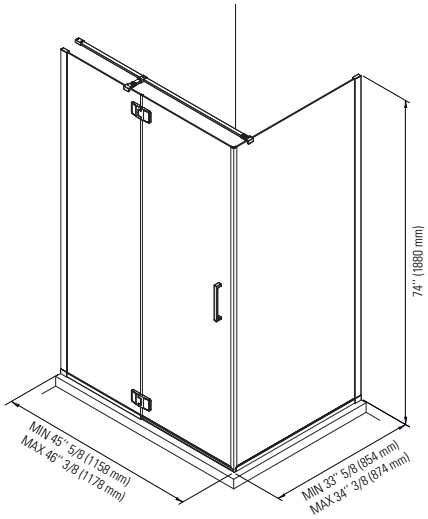

PRODUCT DESCRIPTION:

24-48hrs

Contemporary style
Front and return glass panels
6 mm glass (1/4")
Door opening 24 3/16"
right or left corner installation
Offered in chrome/clear

BOXES SIZE:
77" x 35" x 3"

NET WEIGHT:	GROSS WEIGHT
132 lbs	132 lbs

* Produits Neptune applies a cutting-edge protective covering, which repels water and dirt for easy cleaning and increases the lifespan of your shower doors.

Certification ECORESPONSIBLE
First manufacturer of bathroom products in North America to be certified ecoresponsible.

CONSUMER CHOICE AWARD

Produits Neptune

6835, Picard street, Saint-Hyacinthe (Quebec) J2S 1H3
Phone: (450) 773-7058 - Fax: (450) 773-5063
produitsneptune.com

REV: 07-18

Produits Neptune

AZELIA 3648 - LOT #0

Shower door

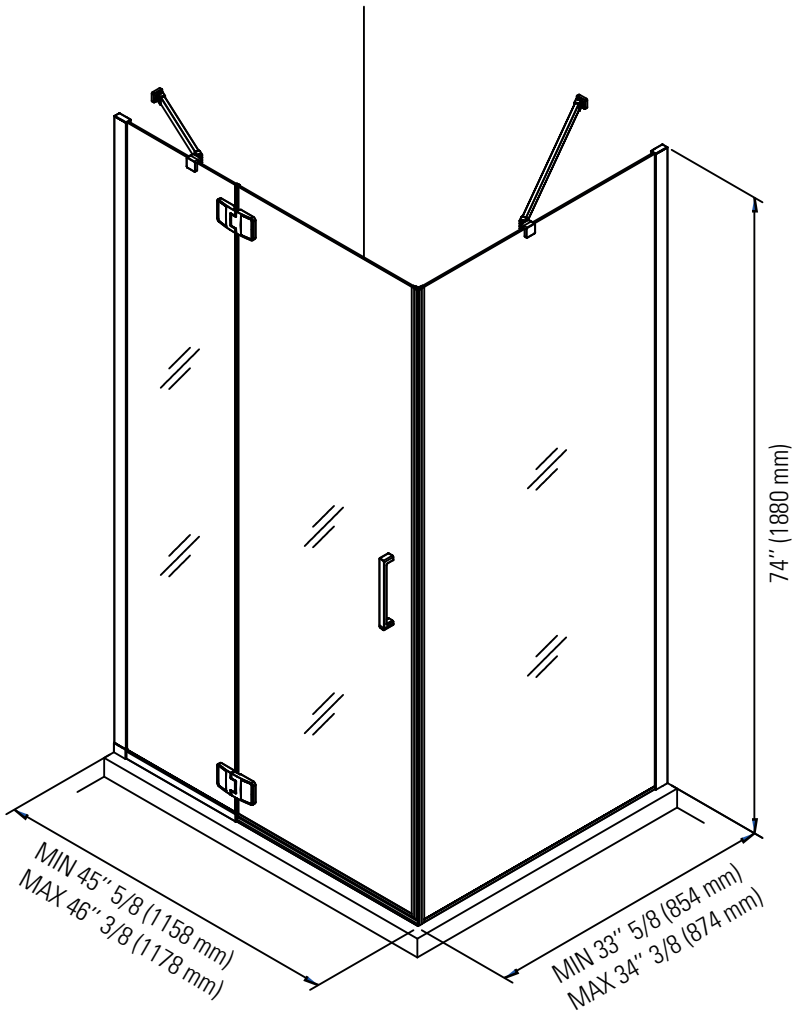

*All dimensions are approximate and subject to change without notice.
Please refer to the installation guide before beginning the installation.

Produits Neptune

AZELIA 3648 - LOT #1

Shower door

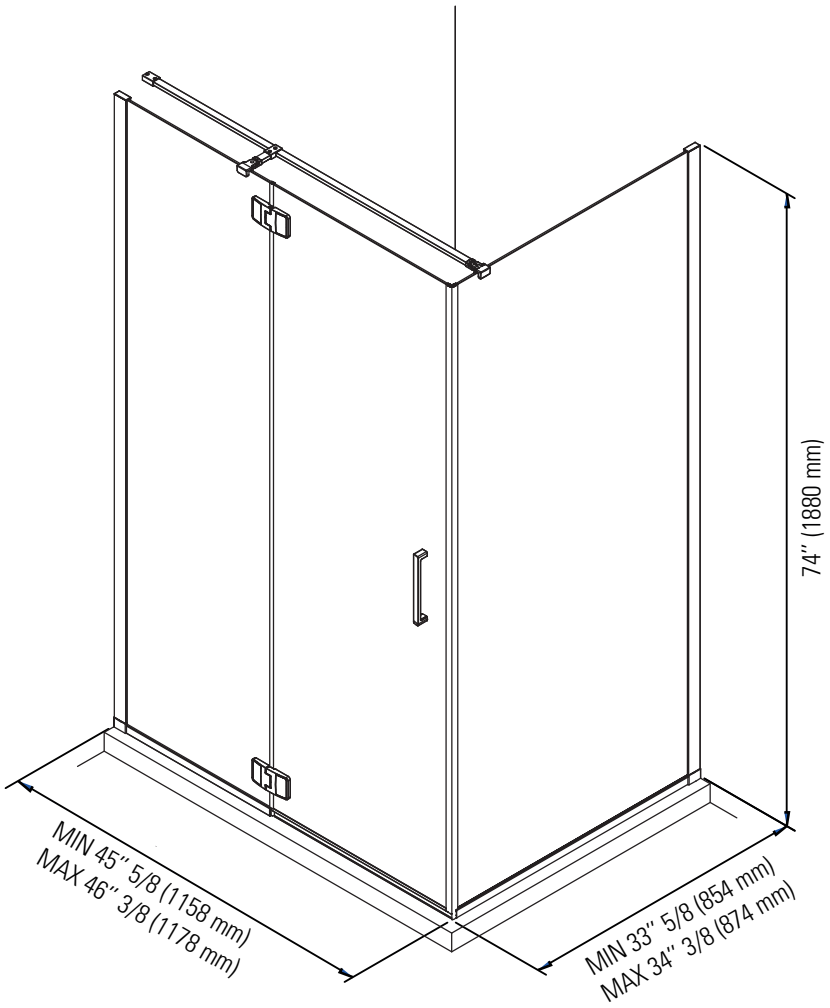

*All dimensions are approximate and subject to change without notice.
Please refer to the installation guide before beginning the installation.