ZURICH 3260

59 3/4" x 32 1/2" x 21 5/8"

PRODUCT DESCRIPTION:

Adjustable feet
Contemporary style
Above-the-floor rough (AFR)
Integrated linear overflow and drain kit included, chrome

24-48hrs
5 days

WATER CAPACITY:	IMMERSION:
240 L	14 1/16 po

BOX SIZE:

61" x 33 7/16" x 22 7/16"

NET WEIGHT:	GROSS WEIGHT:
40.3 kg	50 kg

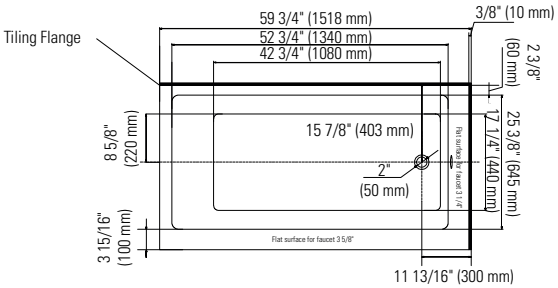

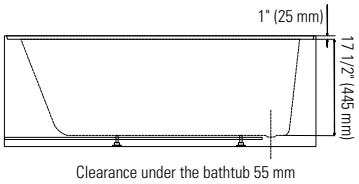

Clearance under the bathtub 55 mm

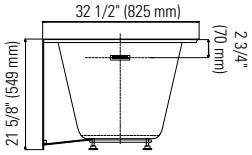

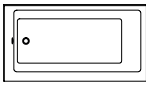

Bathtub only — ZUR3260R2R / ZUR3260L2L

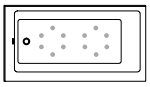

Mass-Air — ZUR3260R2RM / ZUR3260L2LM

Included: 12 injectors, 750W (1 1/2h.p.) Optima blower, with 300W heating element, 72" blower hose extension, and remote control.

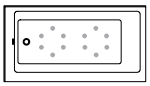

Rouge-Air — ZUR3260R2RA / ZUR3260L2LA

Included: 12 micro-jets, 750W (1 1/2h.p.) Optima blower, with 300W heating element, 72" blower hose extension, and remote control.

GENERAL OPTIONS

Overflow and waste included: Chrome	
Acrylic Colour: White	Standard
Bathtub drain adapter (picture below)	
Gel black neck pillow	
White, brushed nickel or black overflow and drain kit	

MASS-AIR / ROUGE-AIR OPTIONS

Mass-Air Jet finish: White/Chrome	Standard
Others: Chrome/Chrome	
96" blower hose extension	

A blower hose extension is required when the blower is located more than 4' from the bathtub.

BATHTUB DRAIN ADAPTER

123Connect is a freestanding bathtub rough-in (install before tile).

- Quick, easy and clean installation.
- No access panel required.
- Allows for an installation as close to the wall as possible.

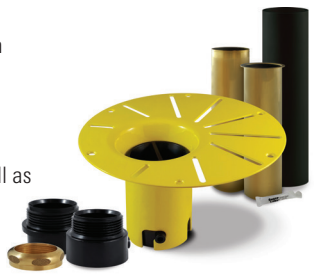

LINEAR OVERFLOW

White — Brushed nickel — Chrome — Black

CONFORMITY ATTESTATION
Bathtub Standards
cUPC
Hydromassage Standard
CAN / CSA.B45.10 / CSA.C22.2 / UL-1795

ECORESPONSABLE Certification
First manufacturer of bathroom products in North America to be certified ecoresponsible

Produits Neptune
Rouge
6835, Picard street, Saint-Hyacinthe (Québec) J2S 1H3
Phone: (450) 773-7058 - produitsneptune.com

REV: 05-21

Produits Neptune
Rouge

Zurich 3260 R2R

Bathtub

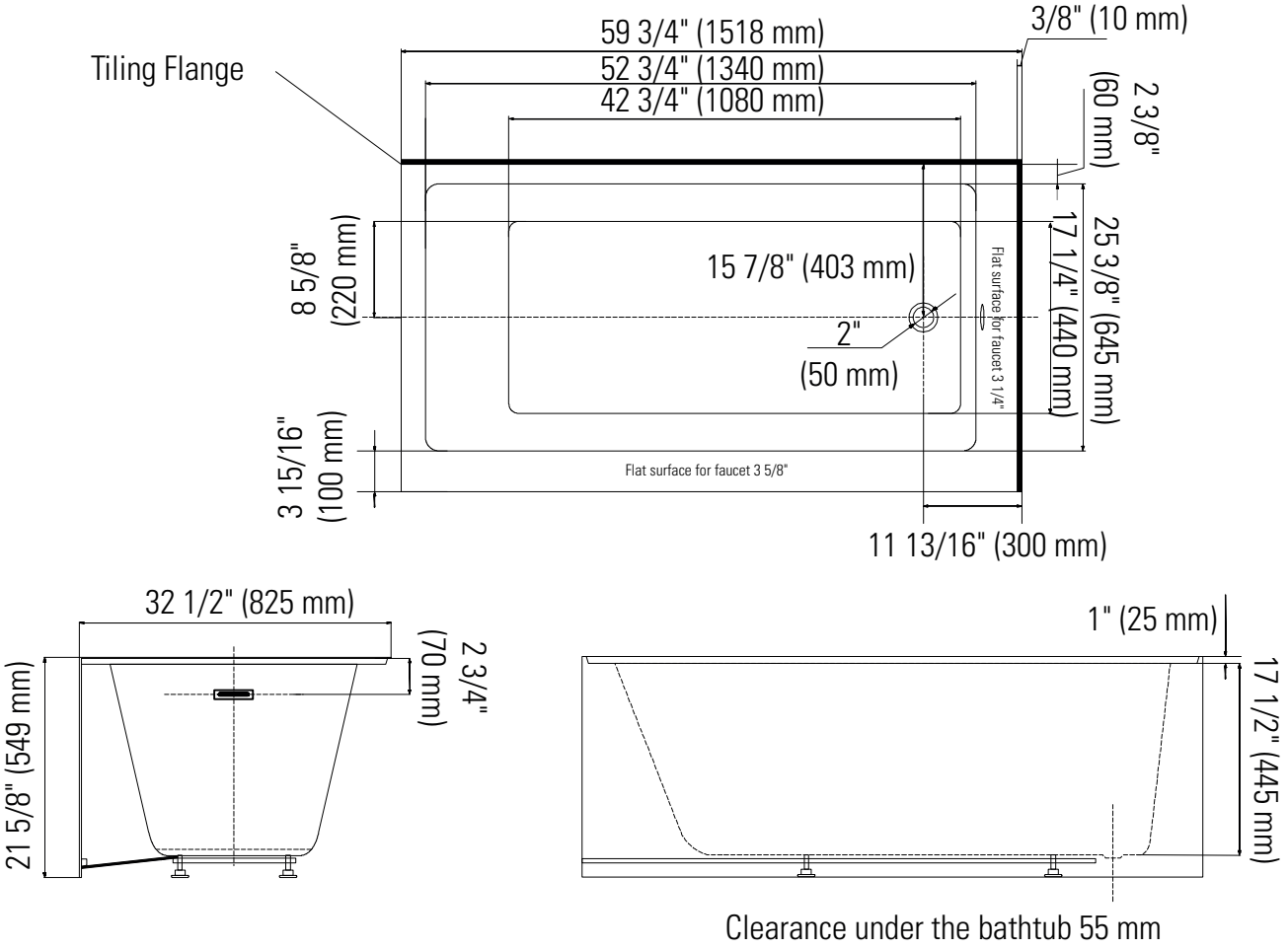

Ajustable feet

*All dimensions are approximate and subject to change without notice
Please refer to the installation guide before beginning the installation

Produits Neptune
Rouge

Zurich 3260 L2L

Bathtub

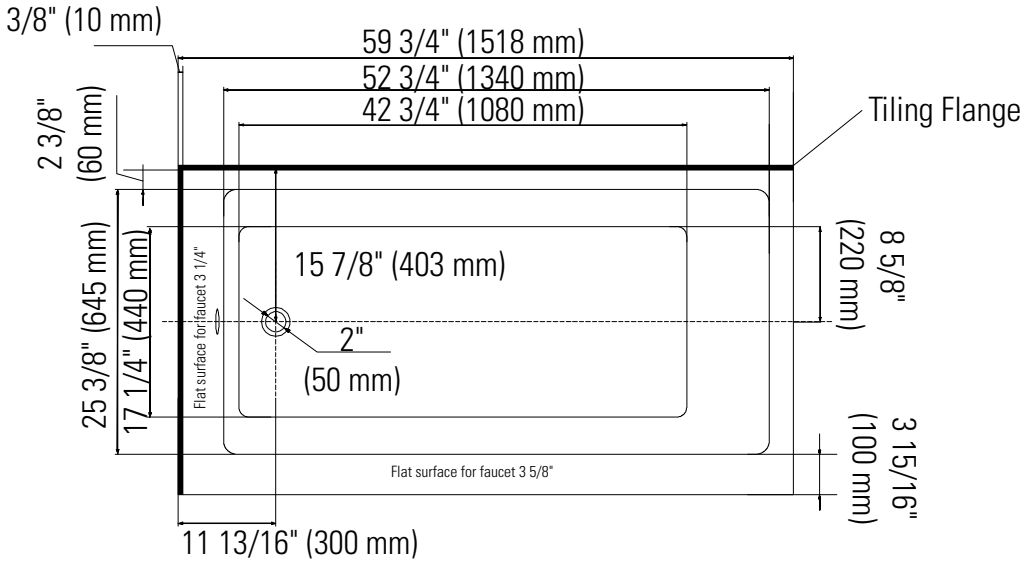

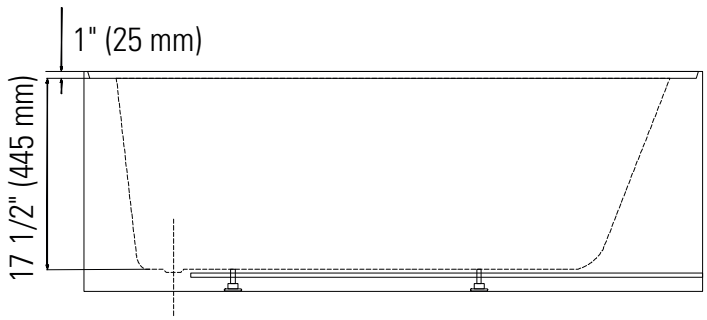

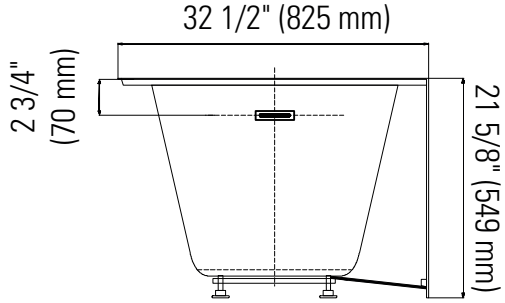

Clearance under the bathtub 55 mm

Ajustable feet

*All dimensions are approximate and subject to change without notice
Please refer to the installation guide before beginning the installation